Sleeves and accessories

Sleeves 392

- Definition 392
- Series 392
- Variants 392
- Fitting and removal criteria 392
- Suffixes 395
- Characteristics 396

Adapter sleeves (mm) 396
Adapter sleeves (inch) 399
Withdrawal sleeves 400

Nuts and washers 404

- Clamping and withdrawal nuts 404
- Lock-washer 404
- Locking stirrup 404
- Characteristics 405

Locking nut 405
Lock-washer 407
Locking stirrup 409

Self-locking precision nuts 410

- Description 410
- Series 410
- Variants 411
- Tolerances 411
- Design criteria 411
- Installation/assembly criteria 411
- Characteristics 412

Castellated, narrow series 412
Blind holes narrow series 413
Castellated, wide series 414
Blind holes, wide series 415
Snap ring 416

Adapter and withdrawal sleeves

Definition

Sleeves permit bearings with a tapered bore to be tightly fitted on cylindrical shafts of broad diameter tolerances. In general, the bore taper of such bearings is 1:12. However, spherical roller bearings of the 240.. and 241.. series have a bore taper of 1:30.

Two principal types of sleeve exist:

- Adapter sleeves, which generate a tight fit by driving the bearing along the sleeve.
- Withdrawal sleeves, which generate a tight fit by driving the sleeve into the bore of the bearing. The latter permit easy dismounting of the bearing by simple application of the appropriate withdrawal nut.

The quality of bearing installation and fit is fundamental to the achievement of long and reliable service. The cleanliness and suitability of the lubrication are also important factors.

Shaft tolerances for use with sleeve

Diameter tolerance: quality 9 minimum

Form tolerance: quality 5 minimum

Hydraulic sleeves: with large diameter bearings it is possible to use a hydraulic sleeve that is provided with ducts and distribution grooves thereby permitting the injection of pressurized oil between the bearing and sleeve, and between the sleeve and shaft.

Series

Basic series		Hydraulic series	
Adapter sleeves	Withdrawal sleeves	Adapter sleeves	Withdrawal sleeves
H2..	AH/AHX 3..	H23..H	AOH 22..
H3..	AH/AHX 22..	H3...H	AOH 23..
H23..	AH/AHX 23..	H31..H	AOH 3...
H3...	AH/AHX 3...	H32..H	AOH 31..
H31..	AH/AHX 31..		AOH 32..
H32..	AH/AHX 32..		AOH 240..
	AH 240..		AOH 241..
	AH 241..		

Variants

The serie 2300 is available in inch.

Fitting and removal criteria

Adapter sleeves

The sleeves are supplied complete with clamping nut and lock-washer. They comply with standard ISO 113/1.

Tightening the sleeves is a delicate operation, refer to the instructions to ensure satisfactory mounting.

Fitting

Mechanical method (1)

Lubricate the contact surfaces: by applying oil or grease to both the sleeve thread and the face of the nut which will be in contact with the bearing.

Tighten the nut until the required fits is obtained*.

Loosen and remove the nut in order to introduce the locking washer. Tighten the nut to reestablish the contact and lock it in place by bending one tab of the locking washer.

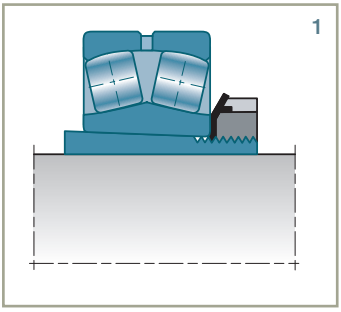
1

Hydraulic method (2)

Lubricate the contact surfaces as per the mechanical method.

Screw the hydraulic nut onto the sleeve, its piston in contact with the bearing. Inject oil until the required fit is obtained*.

Remove the hydraulic nut, lock the sleeve with the locking washer.

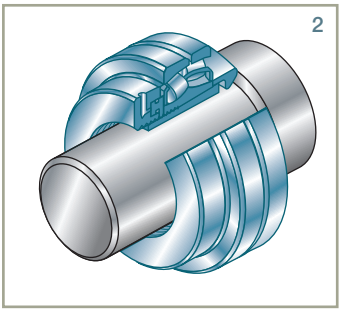
2

Heating method

After heating, fit the bearing onto the sleeve. Tighten the nut until the lenght of the thread exposed at the end of the sleeve is equal to the same lenght measured at room temperature plus required drive-up values*. Lock the nut in place with the locking washer. Induction heaters such as Fast Therm 20, Fast Therm 35 and Fast Therm 150.

* For control of clearance reduction due to fitting: see page 342.

Adapter and withdrawal sleeves *(continued)*

Removal

Mechanical method (3)

Loosen the lock nut a few turns. Using a tubular drift, either against the lock nut or against the inner ring on the opposite face from the lock nut, carefully knock the bearing free.

3

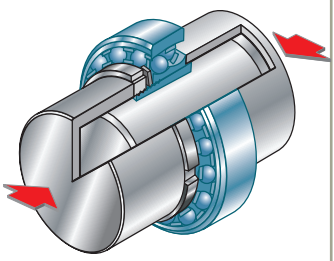

Hydraulic method (4)

Thread the hydraulic nut onto the sleeves. Take care to ensure the piston is facing away from the bearing. With a tubular « buffer » solidly mounted on the shaft against the piston of the hydraulic nut, inject oil until extraction of the sleeve.

Note: the inner ring must be stopped by an abutment on the shaft.

4

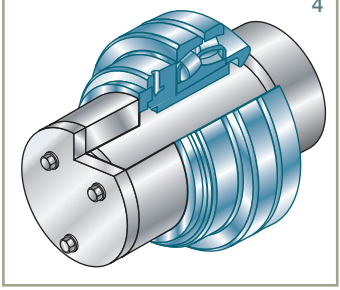

➔ Withdrawal sleeves

The withdrawal sleeve is used in heavy assemblies where the bearings are difficult to handle and adjust. Its removal requires a nut (sold separatly) which screws onto the sleeve and presses against one face of the bearing.

The standard taper of bearing bores and sleeves is 1:12 (except for series 240 and 241).

Fitting

Mechanical method (5)

Lubricate the contact surfaces by applying oil to the sleeve and grease to both the sleeve thread and the face of the nut which will be in contact with the sleeve.

Drive the sleeve up until the required fit is obtained*.

Lock the sleeve in place on the shaft.

5

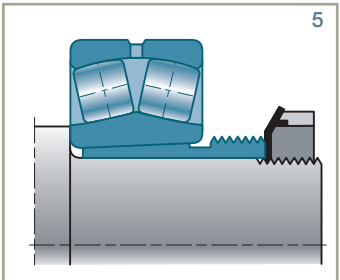

* For control of clearance reduction due to fitting: see page 342.

Hydraulic method (6)

Lubricate the contact surfaces as per the mechanical method.

Lock the hydraulic nut in place on the shaft.

Inject oil until the required drive-up is obtained*. Lock the sleeve in place on the shaft.

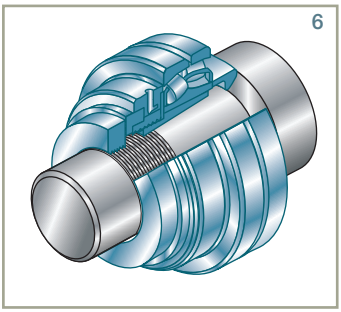
6

Heating method

At room temperature place the bearing on the shaft. Drive the sleeve up and tighten the shaft nut until contact is made. Measure the distance « D » between the nut face and the bearing inner ring face.

After heating the bearing, tighten the nut until the distance between nut face/inner ring face is equal to « D » minus the required drive-up*.

Induction heaters such as Fast Therm 20, Fast Therm 35 or Fast Therm 150 are recommended for controlled bearing heating.

Removal

The shaft must be equipped with an abutment in order to avoid injury due to a sudden ejection of the sleeve.

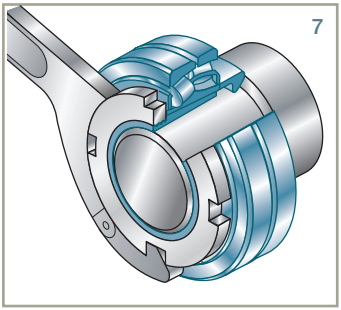
7

Mechanical method (7)

Tighten the withdrawal nut onto the pre-greased thread of the sleeve until extraction is completed.

Hydraulic method (8)

Thread the hydraulic nut onto the sleeve so that its piston faces the bearing. Inject oil until extraction is completed.

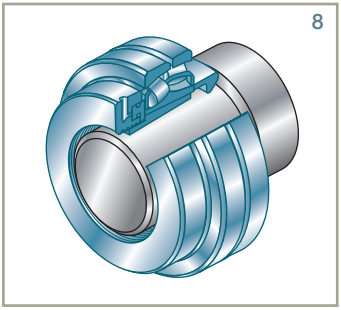
8

Suffixes

G	Modified thread for conformity to ISO standard 2982-1

* For control of clearance reduction due to fitting: see page 342.

Adapter and withdrawal sleeves *(continued)*

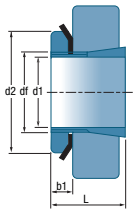

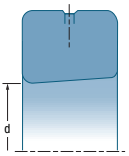

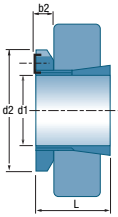

d1	Sleeve	Nut	Washer	d	d2	L	b1	b2	df	
mm	Reference	Ref.	Ref.	mm	mm	mm	mm	mm	mm	kg
17	H204	KM4	MB4	20	32	24	7		M20x1	0.041
	H304	KM4	MB4	20	32	28	7		M20X1	0.045
20	H205	KM5	MB5	25	38	26	8		M25X1.5	0.070
	H305	KM5	MB5	25	38	29	8		M25X1.5	0.075
	H2305	KM5	MB5	25	38	35	8		M25X1.5	0.087
25	H206	KM6	MB6	30	45	27	8		M30X1.5	0.099
	H306	KM6	MB6	30	45	31	8		M30X1.5	0.109
	H2306	KM6	MB6	30	45	38	8		M30X1.5	0.126
30	H207	KM7	MB7	35	52	29	9		M35X1.5	0.125
	H307	KM7	MB7	35	52	35	9		M35X1.5	0.142
	H2307	KM7	MB7	35	52	43	9		M35X1.5	0.165
35	H208	KM8	MB8	40	58	31	10		M40X1.5	0.174
	H308	KM8	MB8	40	58	36	10		M40X1.5	0.189
	H2308	KM8	MB8	40	58	46	10		M40X1.5	0.224
40	H209	KM9	MB9	45	65	33	11		M45X1.5	0.227
	H309	KM9	MB9	45	65	39	11		M45X1.5	0.248
	H2309	KM9	MB9	45	65	50	11		M45X1.5	0.280
45	H210	KM10	MB10	50	70	35	12		M50X1.5	0.274
	H310	KM10	MB10	50	70	42	12		M50X1.5	0.303
	H2310	KM10	MB10	50	70	55	12		M50X1.5	0.362
50	H211	KM11	MB11	55	75	37	12.5		M55X2	0.308
	H311	KM11	MB11	55	75	45	12.5		M55X2	0.345
	H2311	KM11	MB11	55	75	59	12.5		M55X2	0.420
55	H212	KM12	MB12	60	80	38	13		M60X2	0.346
	H312	KM12	MB12	60	80	47	13		M60X2	0.394
	H2312	KM12	MB12	60	80	62	13		M60X2	0.481
60	H213	KM13	MB13	65	85	40	14		M65X2	0.401
	H313	KM13	MB13	65	85	50	14		M65X2	0.458
	H314	KM14	MB14	70	92	52	14		M70X2	0.723
	H2313	KM13	MB13	65	85	65	14		M65X2	0.557
	H2314	KM14	MB14	70	92	68	14		M70X2	0.897
65	H215	KM15	MB15	75	98	43	15		M75X2	0.707
	H315	KM15	MB15	75	98	55	15		M75X2	0.831
	H2315	KM15	MB15	75	98	73	15		M75X2	1.050

Characteristics

Adapter sleeve (mm)

d1	Sleeve	Nut	Washer	d	d2	L	b1	b2	df	
mm	Reference	Ref.	Ref.	mm	mm	mm	mm	mm	mm	kg
70	H216	KM16	MB16	80	105	46	17		M80X2	0.882
	H316	KM16	MB16	80	105	59	17		M80X2	1.030
	H2316	KM16	MB16	80	105	78	17		M80X2	1.280
75	H217	KM17	MB17	85	110	50	18		M85X2	1.020
	H317	KM17	MB17	85	110	63	18		M85X2	1.180
	H2317	KM17	MB17	85	110	82	18		M85X2	1.450
80	H218	KM18	MB18	90	120	52	18		M90X2	1.190
	H318	KM18	MB18	90	120	65	18		M90X2	1.370
	H2318	KM18	MB18	90	120	86	18		M90X2	1.690
85	H219	KM19	MB20	95	125	55	19		M95X2	1.370
	H319	KM19	MB19	95	125	68	19		M95X2	1.560
	H2319	KM19	MB19	95	125	90	19		M95X2	1.920
90	H220	KM20	MB20	100	130	58	20		M100X2	1.490
	H320	KM20	MB20	100	130	71	20		M100X2	1.690
	H3120	KM20	MB20	100	130	76	20		M100X2	1.800
	H2320	KM20	MB20	100	130	97	20		M100X2	2.150
100	H222	KM22	MB22	110	145	63	21		M110X2	1.930
	H322	KM22	MB22	110	145	77	21		M110X2	2.180
	H3122	KM22	MB22	110	145	81	21		M110X2	2.250
	H2322	KM22	MB22	110	145	105	21		M110X2	2.740
110	H3024	KML24	MBL24	120	145	72	22		M120X2	1.930
	H3124	KM24	MB24	120	155	88	22		M120X2	2.640
	H2324	KM24	MB24	120	155	112	22		M120X2	3.190
115	H3026	KML26	MBL26	130	155	80	23		M130X2	2.850
	H3126	KM26	MB26	130	165	92	23		M130X2	3.660
	H2326	KM26	MB26	130	165	121	23		M130X2	4.600
125	H3028	KML28	MBL28	140	165	82	24		M140X2	3.160
	H3128	KM28	MB28	140	180	97	24		M140X2	4.340
	H2328	KM28	MB28	150	180	131	24		M140X2	5.550
135	H3030	KML30	MBL30	150	180	87	26		M150X2	3.890
	H3130	KM30	MB30	150	195	111	26		M150X2	5.520
	H2330	KM30	MB30	150	195	139	26		M150X2	6.630
140	H3032	KML32	MBL32	160	190	93	27.5		M160X3	5.210
	H3132	KM32	MB32	160	210	119	28		M160X3	7.670
	H2332	KM32	MB32	160	210	147	28		M160X3	9.140

Adapter and withdrawal sleeves *(continued)*

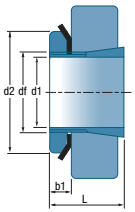

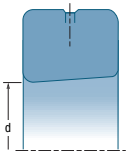

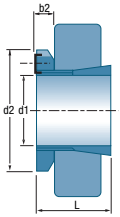

■ Adapter sleeve (mm) *(continued)*

d1	Sleeve	Nut	Washer	d	d2	L	b1	b2	df	
mm	Reference	Ref.	Ref.	mm	mm	mm	mm	mm	mm	kg
150	H3034 H3134 H2334	KML34 KM34 KM34	MBL34 MB34 MB34	170 170 170	200 220 220	101 122 154	28.5 29 29		M170X3 M170X3 M170X3	5.990 8.380 10.200
160	H3036 H3136 H2336	KML36 KM36 KM36	MBL36 MB36 MB36	180 180 180	210 230 230	109 131 161	29.5 30 30		M180X3 M180X3 M180X3	6.830 9.500 11.300
170	H3038 H3138 H2338	KML38 KM38 KM38	MBL38 MB38 MB38	190 190 190	220 240 240	112 141 169	30.5 31 31		M190X3 M190X3 M190X3	7.450 10.800 12.600
180	H3040 H3140 H2340	KML40 KM40 KM40	MBL40 MB40 MB40	200 200 200	240 250 250	120 150 176	31.5 32 32		M200X3 M200X3 M200X3	9.190 12.100 13.900
200	H3044H H3144 H2344H	HM3044 HM44T HM44T	MS3044 MB44 MB44	220 220 220	260 280 280	126 161 186	30 35 35	41	TR220X4 TR220X4 TR220X4	10.300 15.000 17.000
220	H3048H H3148H H2348H	HM3048 HM48T HM48T	MS3048 MB48 MB48	240 240 240	290 300 300	133 172 199	34 37 37	46	TR240X4 TR240X4 TR240X4	13.200 17.600 20.000
240	H3052H H3152H H2352H	HM3052 HM52T HM52T	MS3052 MB52 MB52	260 260 260	310 330 330	145 190 211	34 39 39	46	TR260X4 TR260X4 TR260X4	15.300 22.300 24.500
260	H3056H H3156H H2356H	HM3056 HM56T HM56T	MS3056 MB56 MB56	280 280 280	330 350 350	152 195 224	38 41 41	50	TR280X4 TR280X4 TR280X4	17.700 25.100 28.400
280	H3060H H3160H H3260H	HM3060 HM3160 HM3160	MS3060 MS3160 MS3160	300 300 300	360 380 380	168 208 240	42 40 40	54 53 53	TR300X4 TR300X4 TR300X4	22.800 30.200 34.100
300	H3064H H3164H	HM3064 HM3164	MS3064 MS3164	320 320	380 400	171 226	42 42	55 56	TR320X5 TR320X5	24.600 34.900
320	H3068H H3168H	HM3068 HM3168	MS3068 MS3168	340 340	400 440	187 254	45 55	58 72	TR340X5 TR340X5	28.700 50.000
340	H3072H H3172H	HM3072 HM3172	MS3072 MS3172	360 360	420 460	188 259	45 58	58 75	TR360X5 TR360X5	30.500 56.000
360	H3076H	HM3076	MS3076	380	450	192	48	62	TR380X5	35.800
380	H3080H	HM3080	MS3080	400	470	210	52	66	TR400X5	41.300

Adapter sleeve (inch)

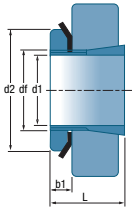

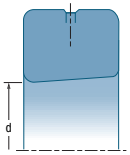

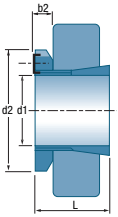

d1'	Sleeve	Nut	Washer	d	d2	L	b1	df	
	Reference	Ref.	Ref.	mm	mm	mm	mm	mm	kg
3/4	H2305-12	KM5	MB5	25	38	35	8	M25X1.5	0.087
7/8	H2306-14	KM6	MB6	30	45	38	8	M30X1.5	0.126
15/16	H2306-15	KM6	MB6	30	45	38	8	M30X1.5	0.126
1	H2306-16	KM6	MB6	30	45	38	8	M30X1.5	0.126
1-1/8	H2307-18	KM7	MB7	35	52	43	9	M35X1.5	0.165
1-3/16	H2307-19	KM7	MB7	35	52	43	9	M35X1.5	0.165
1-1/4	H2307-20	KM7	MB7	35	52	43	9	M35X1.5	0.165
1-1/4	H2308-20	KM8	MB8	40	58	46	10	M40X1.5	0.224
1-5/16	H2308-21	KM8	MB8	40	58	46	10	M40X1.5	0.224
1-3/8	H2308-22	KM8	MB8	40	58	46	10	M40X1.5	0.224
1-7/16	H2309-23	KM9	MB9	45	65	50	11	M45X1.5	0.280
1-1/2	H2309-24	KM9	MB9	45	65	50	11	M45X1.5	0.280
1-9/16	H2309-25	KM9	MB9	45	65	50	11	M45X1.5	0.280
1-5/8	H2310-26	KM10	MB10	50	70	55	12	M50X1.5	0.362
1-11/16	H2310-27	KM10	MB10	50	70	55	12	M50X1.5	0.362
1-3/4	H2310-28	KM10	MB10	50	70	55	12	M50X1.5	0.362
1-7/8	H2311-30	KM11	MB11	55	75	59	12	M55X2	0.420
1-15/16	H2311-31	KM11	MB11	55	75	59	12	M55X2	0.420
2	H2311-32	KM11	MB11	55	75	59	12	M55X2	0.420
2-1/8	H2311-34	KM11	MB11	55	75	59	12	M55X2	0.420
2-3/16	H2313-35	KM13	MB13	65	85	65	14	M65X2	0.557
2-1/4	H2313-36	KM13	MB13	65	85	65	14	M65X2	0.557
2-3/8	H2313-38	KM13	MB13	65	85	65	14	M65X2	0.557
2-7/16	H2313-39	KM13	MB13	65	85	65	14	M65X2	0.557
2-7/16	H2315-39	KM15	MB15	75	98	73	15	M75X2	1.050
2-1/2	H2315-40	KM15	MB15	75	98	73	15	M75X2	1.050
2-11/16	H2316-43	KM16	MB16	80	105	78	17	M80X2	1.280
2-3/4	H2316-44	KM16	MB16	80	105	78	17	M80X2	1.280
2-15/16	H2317-47	KM17	MB17	85	110	82	18	M85X2	1.450
3	H2317-48	KM17	MB17	85	110	82	18	M85X2	1.450
3-1/4	H2319-55	KM19	MB19	95	125	90	19	M95X2	1.920
3-1/2	H2320-56	KM20	MB20	100	130	97	20	M100X2	2.150

Adapter and withdrawal sleeves *(continued)*

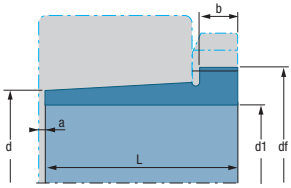

d1	Sleeve	Nut	d	L	a	b	df	
mm	Reference	Ref.	mm	mm	mm	mm	mm	kg
35	AH308	KM9	40.00	29	3	6	M45x1.5	0.090
	AH2308	KM9	40.00	40	3	7	M45x1.5	0.130
40	AH309	KM10	45.00	31	3	6	M50x1.5	0.110
	AH2309	KM10	45.00	44	3	7	M50x1.5	0.160
45	AHX310	KM11	50.00	35	3	7	M55x2	0.140
	AHX2310	KM11	50.00	50	3	9	M55x2	0.210
50	AHX311	KM12	55.00	37	3	7	M60x2	0.160
	AHX2311	KM12	55.00	54	3	10	M60x2	0.260
55	AHX312	KM13	60.00	40	3	8	M65x2	0.190
	AHX2312	KM13	60.00	58	3	11	M65x2	0.300
60	AH313G	KM14	65.00	42	3	8	M70x2	0.230
	AH2313G	KM14	65.00	61	3	12	M70x2	0.360
65	AH314G	KM15	70.00	43	4	8	M75x2	0.250
	AHX2314G	KM15	70.00	64	4	12	M75x2	0.420
70	AH315G	KM16	75.00	45	4.4	8	M80x2	0.290
	AHX2315G	KM16	75.00	68	4	12	M80x2	0.480
75	AH316	KM18	80.00	48	4	8	M90x2	0.370
	AHX2316	KM18	80.00	72	4	12	M90x2	0.600
80	AHX317	KM19	85.00	52	4	9	M95x2	0.430
	AHX2317	KM19	85.00	74	4	13	M95x2	0.670
85	AHX318	KM20	90.00	53	4	9	M100x2	0.460
	AHX2318	KM20	90.00	79	4	14	M100x2	0.780
	AHX3218	KM20	90.00	79	4	10	M100x2	0.580
90	AHX319	KM21	95.00	57	4	10	M105x2	0.530
	AHX2319	KM21	95.00	85	4	16	M105x2	0.900
95	AHX320	KM22	100.00	59	4	10	M110x2	0.600
	AHX3120	KM22	100.00	64	4	11	M110x2	0.650
	AHX3220	KM22	100.00	73	4	11	M110x2	0.770
	AHX2320	KM22	100.00	90	4	16	M110x2	1.000

Withdrawal sleeve

d1	Sleeve	Nut	d	L	a	b	df	
mm	Reference	Ref.	mm	mm	mm	mm	mm	kg
105	AHX322	KM24	110.00	63	4	12	M120x2	0.710
	AHX3122	KM24	110.00	68	4	11	M120x2	0.760
	AHX3222G	KM24	110.00	82	4	11	M120x2	1.000
	AH24122	KM23	110.00	82	9	13	M115X2	0.710
	AHX2322G	KM24	110.00	98	4	16	M120x2	1.260
115	AHX3024	KM26	120.00	60	4	13	M130x2	0.750
	AH24024	KM25	120.00	73	9	13	M125x2	0.650
	AHX3124	KM26	120.00	75	4	12	M130x2	0.950
	AHX3224G	KM26	120.00	90	4	13	M130x2	1.200
	AH24124	KM26	120.00	93	9	13	M130x2	1.000
	AHX2324G	KM26	120.00	105	4	17	M130x2	1.490
125	AHX3026	KM28	130.00	67	4	14	M140x2	0.930
	AHX3126	KM28	130.00	78	4	12	M140x2	1.090
	AH24026	KM27	130.00	83	9	14	M135x2	0.840
	AH24126	KM28	130.00	94	9	14	M140x2	1.150
	AHX3226G	KM28	130.00	98	4	15	M140x2	1.470
	AHX2326G	KM28	130.00	115	4	19	M140x2	1.830
135	AHX3028	KM30	140.00	68	5	14	M150x2	1.010
	AHX3128	KM30	140.00	83	5	14	M150x2	1.280
	AH24028	KM29	140.00	83	10	14	M150x2	0.940
	AH24128	KM30	140.00	99	10	14	M150x2	1.250
	AHX3228G	KM30	140.00	104	5	15	M150x2	1.720
	AHX2328G	KM30	140.00	125	5	20	M150x2	2.220
145	AHX3030	KM32	150.00	72	5	15	M160x3	1.150
	AH24030	KM31	150.00	90	11	15	M155x3	1.110
	AHX3130G	KM32	150.00	96	5	15	M160x3	1.640
	AH24130	KM32	150.00	115	11	15	M160x3	1.600
	AHX2330G	KM32	150.00	135	5	24	M160x3	2.600
	AHX3230G	KM32	150.00	135	5	17	M160x3	2.070
150	AH3032	KM34	160.00	77	5	16	M170x3	2.060
	AH24032	KM34	160.00	95	11	15	M170x3	2.270
	AH3132G	KM34	160.00	103	5	16	M170x3	2.900
	AH3232G	KM34	160.00	124	6	20	M170x3	3.630
	AH24132	KM34	160.00	124	11	15	M170x3	3.000
	AH2332G	KM34	160.00	140	6	24	M170x3	4.240

Adapter and withdrawal sleeves *(continued)*

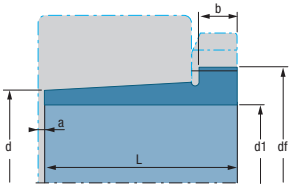

d1	Sleeve	Nut	d	L	a	b	df	
mm	Reference	Ref.	mm	mm	mm	mm	mm	kg
160	AH3034	KM36	170.00	85	5	17	M180x3	2.430
	AH3134G	KM36	170.00	104	5	16	M180x3	3.210
160	AH24034	KM36	170.00	106	11	16	M180X3	2.700
	AH24134	KM36	170.00	125	11	16	M180x3	3.210
	AH3234G	KM36	170.00	134	6	24	M180x3	4.350
	AH2334G	KM36	170.00	146	6	24	M180x3	4.810
170	AH3036	KM38	180.00	92	6	17	M190X3	2.810
	AH2236G	KM38	180.00	105	6	17	M190X3	3.390
	AH3136G	KM38	180.00	116	6	19	M190X3	3.770
	AH24036	KM38	180.00	116	11	16	M190X3	3.100
	AH24136	KM38	180.00	134	11	16	M190x3	3.720
	AH3236G	KM38	180.00	140	6	26	M190X3	5.400
	AH2336G	KM38	180.00	154	6	26	M190X3	5.400
180	AH3038G	KM40	190.00	96	6	18	M200X3	3.160
	AH2238G	KM40	190.00	112	6	18	M200X3	4.200
	AH24038	KM40	190.00	118	13	18	M200X3	3.460
	AH3138G	KM40	190.00	125	6	20	M200X3	4.380
	AH3238G	KM40	190.00	145	7	25	M200X3	5.300
	AH24138	KM40	190.00	146	13	18	M200X3	4.280
	AH2338G	KM40	190.00	160	7	26	M200X3	6.040
190	AH3040G	HM42T	200.00	102	6	19	TR210x4	3.570
	AH2240	HM44T	200.00	118	6	19	TR220x4	4.680
	AH24040	HM42T	200.00	127	13	18	TR210x4	3.930
	AH3140	HM44T	200.00	134	6	21	TR220x4	5.550
	AH3240	HM44T	200.00	153	7	25	TR220x4	6.590
	AH24140	HM42T	200.00	158	13	18	TR210x4	5.100
	AH2340	HM44T	200.00	170	7	30	TR220x4	7.540
200	AOH3044G	HM46T	220.00	111	6	20	TR230x4	7.290
	AOH2244	HM48T	220.00	130	6	20	TR240x4	9.100
	AOH24044	HM46T	220.00	138	14	20	TR230x4	8.250
	AOH3144	HM48T	220.00	145	6	23	TR240x4	10.400
	AOH24144	HM46T	220.00	170	14	20	TR230x4	10.200
	AOH2344	HM48T	220.00	181	8	30	TR240x4	13.500
220	AOH3048	HM52T	240.00	116	7	21	TR260x4	8.750
	AOH24048	HM50T	240.00	138	15	20	TR250x4	9.000

Withdrawal sleeve *(continued)*

d1	Sleeve	Nut	d	L	a	b	df	
mm	Reference	Ref.	mm	mm	mm	mm	mm	kg
220	AOH3148	HM52T	240.00	154	7	25	TR260x4	12.000
	AOH24148	HM52T	240.00	180	15	20	TR260x4	12.500
	AOH2348	HM52T	240.00	189	8	30	TR260x4	15.500
240	AOH3052	HM56T	260.00	128	7	23	TR280x4	10.700
	AOH24052G	HM56T	260.00	162	16	22	TR280X4	12.300
	AOH3152G	HM56T	260.00	172	7	26	TR280x4	16.200
	AOH24152	HM56T	260.00	202	16	22	TR280x4	15.400
	AOH2352G	HM56T	260.00	205	8	30	TR280x4	18.900
260	AOH3056	HM3060	280.00	131	8	24	TR300x4	12.000
	AOH24056G	HM3160	280.00	162	17	22	TR300X4	13.400
	AOH3156G	HM3160	280.00	175	8	28	TR300x4	17.100
	AOH24156	HM3160	280.00	202	17	22	TR300x4	16.300
	AOH2356G	HM3160	280.00	212	8	30	TR300x4	21.300
280	AOH3060	HM3064	300.00	145	8	26	TR320x5	14.400
	AOH24060G	HM3164	300.00	184	18	24	TR320x5	16.400
	AOH3160G	HM3164	300.00	192	8	30	TR320x5	20.400
	AOH24160	HM3164	300.00	224	18	24	TR320x5	20.200
	AOH3260G	HM3164	300.00	228	8	34	TR320x5	23.400
300	AOH3064G	HM3068	320.00	149	8	27	TR340x5	15.600
	AOH3164G	HM3168	320.00	209	8	31	TR340x5	23.600
	AOH24164	HM3168	320.00	242	18	24	TR340x5	21.400
320	AOH3068G	HM3072	340.00	162	9	28	TR360x5	18.600
	AOH3168G	HM3172	340.00	225	9	33	TR360x5	27.600
340	AOH3072G	HM3076	360.00	167	9	30	TR380x5	20.400
	AOH3172G	HM3176	360.00	229	9	35	TR380x5	30.600
	AH24172H	HM3176	360.00	269	20	26	TR380x5	30.000
360	AOH3076G	HM3080	380.00	170	10	31	TR400x5	22.700
380	AOH3080G	HM3084	400.00	183	10	33	TR420x5	26.100

Nuts and washers

Clamping and withdrawal nut

The clamping and withdrawal nuts (Standard ISO 2982) are used for axial locking of bearings with:
- cylindrical bare
- tapered bore

and for the extraction of a withdrawal sleeve.

When used for axial attachment, they are mounted with the corresponding tabwasher or locking stirrup with a suitable hexagonal head bolt, thereby making a simple low-cost and low-footprint clamping device.

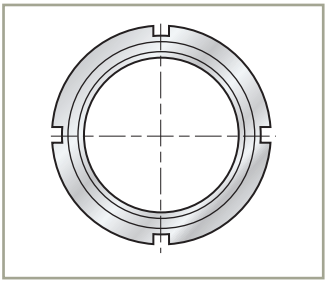

Lock-washer (small dimensions)

The lock-washer (Standard ISO 2982) provides for positive locking of the clamping nut on the shaft. A groove has to be machined in the shaft if the lock-washer is used. The large number of tabs in the lock-washer enables the nut to be locked in the exactly right adjustment position.

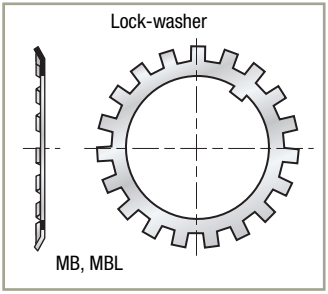

Locking stirrup

This is a suitable system for large size nut safetying.

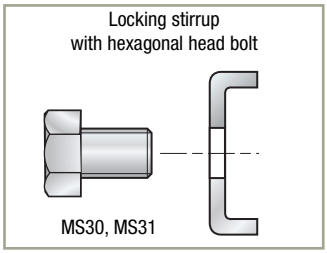

Characteristics

Locking nut

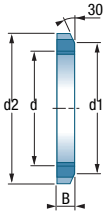

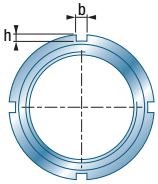

d		G	d2	d1	B	b	h		corresponding lock-washer
mm	Reference	mm	mm	mm	mm	mm	mm	kg	Reference
10	KM0	M10 X 0.75	18	13.5	4	3	2.0	0.005	MB 0
12	KM1	M12 X 1	22	17	4	3	2.0	0.007	MB 1
15	KM2	M15 X 1	25	21	5	4	2.0	0.010	MB 2
17	KM3	M17 X 1	28	24	5	4	2.0	0.013	MB 3
20	KM4	M20 X 1	32	26	6	4	2.0	0.019	MB 4
25	KM5	M25 X 1.5	38	32	7	5	2.0	0.025	MB 5
30	KM6	M30 X 1.5	45	38	7	5	2.0	0.043	MB 6
35	KM7	M35 X 1.5	52	44	8	5	2.0	0.053	MB 7
40	KM8	M40 X 1.5	58	50	9	6	2.5	0.085	MB 8
45	KM9	M45 X 1.5	65	56	10	6	2.5	0.120	MB 9
50	KM10	M50 X 1.5	70	61	11	6	2.5	0.150	MB 10
55	KM11	M55 X 2	75	67	11	7	3.0	0.160	MB 11
60	KM12	M60 X 2	80	73	11	7	3.0	0.170	MB 12
65	KM13	M65 X 2	85	79	12	7	3.0	0.200	MB 13
70	KM14	M70 X 2	92	85	12	8	3.5	0.240	MB 14
75	KM15	M75 X 2	98	90	13	8	3.5	0.290	MB 15
80	KM16	M80 X 2	105	95	15	8	3.5	0.400	MB 16
85	KM17	M85 X 2	110	102	16	8	3.5	0.450	MB 17
90	KM18	M90 X 2	120	108	16	10	4.0	0.560	MB 18
95	KM19	M95 X 2	125	113	17	10	4.0	0.660	MB 19
100	KM20	M100 X 2	130	120	18	10	4.0	0.700	MB 20
105	KM21	M105 X 2	140	126	18	12	5.0	0.850	MB 21
110	KM22	M110 X 2	145	133	19	12	5.0	0.970	MB 22
115	KM23	M115 X 2	150	137	19	12	5.0	1.010	MB 23
120	KM24	M120 X 2	155	138	20	12	5.0	1.080	MB 24
125	KM25	M125 X 2	160	148	21	12	5.0	1.190	MB 25
130	KM26	M130 X 2	165	149	21	12	5.0	1.250	MB 26
135	KM27	M135 X 2	175	160	22	14	6.0	1.550	MB 27
140	KM28	M140 X 2	180	160	22	14	6.0	1.560	MB 28
145	KM29	M145 X 2	190	172	24	14	6.0	2.000	MB 29
150	KM30	M150 X 2	195	171	24	14	6.0	2.030	MB 30

Nuts and washers *(continued)*

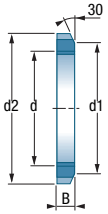

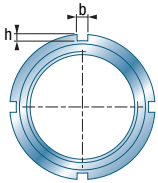

■ Locking nut *(continued)*

d		G	d2	d1	B	b	H		corresponding lock-washer
mm	mm	mm	mm	mm	mm	mm	mm	kg	Reference
155	KM31	M155 X 3	200	182	25	16	7.0	2.210	MB 31
160	KM32	M160 X 3	210	182	25	16	7.0	2.590	MB 32
165	KM33	M165 X 3	210	193	26	16	7.0	2.700	MB 33
170	KM34	M170 X 3	220	193	26	16	7.0	2.800	MB 34
180	KM36	M180 X 3	230	203	27	18	8.0	3.070	MB 36
190	KM38	M190 X 3	240	214	28	18	8.0	3.390	MB 38
200	KML40	M200 X 3	240	222	29	18	8.0	2.980	MBL 40
200	KM40	M200 X 3	250	226	29	18	8.0	3.690	MB 40
205	HML41T	TR205 X 4	250	232	30	18	8.0	3.430	
210	HM42T	TR210 X 4	270	238	30	20	10.0	4.750	MB 42
215	HML43T	TR215 X 4	260	242	30	20	9.0	3.720	
220	HM3044	TR220 X 4	260	242	30	20	9.0	3.090	MS 3044
220	HM44T	TR220 X 4	280	250	32	20	10.0	5.350	MB 44
230	HM46T	TR230 X 4	290	260	34	20	10.0	5.800	MB 46
240	HM3048	TR240 X 4	290	270	34	20	10.0	5.160	MS 3048
240	HM48T	TR240 X 4	300	270	34	20	10.0	6.200	MB 48
260	HM3052	TR260 X 4	310	290	34	20	10.0	5.670	MS 3052
260	HM52T	TR260 X 4	330	300	35	24	12.0	8.400	MB 52
280	HM3056	TR280 X 4	330	310	38	24	10.0	6.780	MS 3056
280	HM56T	TR280 X 4	350	320	36	24	12.0	9.600	MB 56
300	HM3060	TR300 X 4	360	336	42	24	12.0	9.620	MS 3060
300	HM3160	TR300 X 4	380	340	40	24	12.0	11.700	MS 3160
320	HM3064	TR320 X 5	380	356	42	24	12.0	9.940	MS 3064
320	HM3164	TR320 X 5	400	360	42	24	12.0	13.000	MS 3164
340	HM3068	TR340 X 5	400	376	45	24	12.0	11.700	MS 3068
340	HM3168	TR340 X 5	440	400	55	28	15.0	23.000	MS 3168
360	HM3072	TR360 X 5	420	394	45	28	13.0	12.000	MS 3072
360	HM3172	TR360 X 5	460	420	58	28	15.0	25.000	MS 3172
380	HM3076	TR380 X 5	450	422	48	28	14.0	14.900	MS 3076
380	HM3176	TR380 X 5	490	440	60	32	18.0	30.800	MS 3176
400	HM3080	TR400 X 5	470	442	52	24	14.0	16.900	MS 3080
420	HM3084	TR420 X 5	490	462	52	32	14.0	17.400	MS 3084

Lock-washer

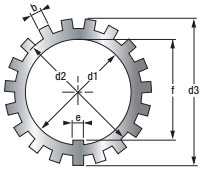

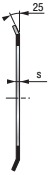

d1		d3	d2	e	f	b	s		corresponding slotted nut
mm	Reference	mm	mm	mm	mm	mm	mm	kg	Reference
10	MB 0	21	13.5	3	8.50	3	1.00	0.130	KM0
12	MB 1	25	17	3	10.50	3	1.00	0.190	KM1
15	MB 2	28	21	4	13.50	4	1.00	0.250	KM2
17	MB 3	32	24	4	15.50	4	1.00	0.310	KM3
20	MB 4	36	26	4	18.50	4	1.00	0.350	KM4
25	MB 5	42	32	5	23.00	5	1.25	0.640	KM5
30	MB 6	49	38	5	27.50	5	1.25	0.780	KM6
35	MB 7	57	44	6	32.50	5	1.25	1.040	KM7
40	MB 8	62	50	6	37.50	6	1.25	1.230	KM8
45	MB 9	69	56	6	42.50	6	1.25	1.520	KM9
50	MB 10	74	61	6	47.50	6	1.25	1.600	KM10
55	MB 11	81	67	8	52.50	7	1.25	1.960	KM11
60	MB 12	86	73	8	57.50	7	1.50	2.530	KM12
65	MB 13	92	79	8	62.50	7	1.50	2.900	KM13
70	MB 14	98	85	8	66.50	8	1.50	3.340	KM14
75	MB 15	104	90	8	71.50	8	1.50	3.560	KM15
80	MB 16	112	95	10	76.50	8	1.75	4.640	KM16
85	MB 17	119	102	10	81.50	8	1.75	5.240	KM17
90	MB 18	126	108	10	86.50	10	1.75	6.230	KM18
95	MB 19	133	113	10	91.50	10	1.75	6.700	KM19
100	MB 20	142	120	12	96.50	10	1.75	7.650	KM20
105	MB 21	145	126	12	100.50	12	1.75	8.260	KM21
110	MB 22	154	133	12	105.50	12	1.75	9.400	KM22
115	MB 23	159	137	12	110.50	12	2.00	10.800	KM23
120	MB 24	164	138	14	115.00	12	2.00	10.500	KM24
125	MB 25	170	148	14	120.00	12	2.00	11.800	KM25
130	MB 26	175	149	14	125.00	12	2.00	11.300	KM26
135	MB 27	185	160	14	130.00	14	2.00	14.400	KM27
140	MB 28	192	160	16	135.00	14	2.00	14.200	KM28
145	MB 29	202	172	16	140.00	14	2.00	16.800	KM29

Nuts and washers *(continued)*

■ Lock-washer *(continued)*

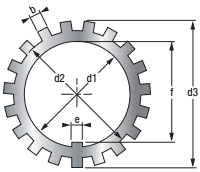

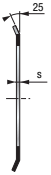

d1		d3	d2	e	f	b	s		corresponding slotted nut
mm	Reference	mm	mm	mm	mm	mm	mm	kg	Reference
150	MB 30	205	171	16	145.00	14	2.00	15.50	KM30
155	MB 31	212	182	16	147.50	16	2.50	20.90	KM31
160	MB 32	217	182	18	154.00	16	2.50	22.20	KM32
165	MB 33	222	193	18	157.50	16	2.50	24.10	KM33
170	MB 34	232	193	18	164.00	16	2.50	24.70	KM34
180	MB 36	242	203	20	174.00	18	2.50	26.80	KM36
190	MB 38	252	214	20	184.00	18	2.50	27.80	KM38
200	MBL 40	245	222	20	194.00	18	2.50	21.40	KLM40
200	MB 40	262	226	20	194.00	18	2.50	29.30	KM40
220	MB 44	292	250	24	213.00	20	3.00	35.00	HM44T
240	MB 48	312	270	24	233.00	20	3.00	45.00	HM48T
260	MB 52	342	300	28	253.00	24	3.00	65.00	HM52T
280	MB 56	362	320	28	273.00	24	3.00	105.00	HM56T

Stirrup

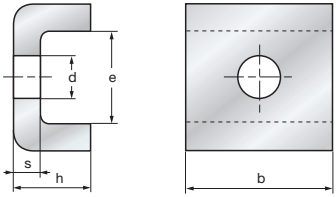

	s	b	h	d	e	screw	corresponding nut
Reference	mm	mm	mm	mm	mm	Ref.	Ref.
MS 3044	4	20	12	7	13.5	M6X16	HM3044
MS 3048	4	20	12	9	17.5	M8X20	HM3048
MS 3052	4	20	12	9	17.5	M8X20	HM3052
MS 3056	4	24	12	9	17.5	M8X20	HM3056
MS 3060	4	24	12	9	20.5	M8X20	HM3060
MS 3064	5	24	15	9	21.0	M8X20	HM3064
MS 3068	5	24	15	9	21.0	M8X20	HM3068
MS 3072	5	28	15	9	20.0	M8X20	HM3072
MS 3076	5	28	15	12	24.0	M10X25	HM3076
MS 3080	5	28	15	12	24.0	M10X25	HM3080
MS 3160	4	24	12	12	30.5	M10X25	HM3160
MS 3164	5	24	15	12	31.0	M10X25	HM3164
MS 3168	5	28	15	14	38.0	M12X30	HM3168
MS 3172	5	28	15	14	38.0	M12X30	HM3172

Self-locking precision nuts

Description

The self-locking precision nuts are assembly accessories that must be used in cases such as the following:

- When a preloading of the bearings package is required to guarantee the maintenance of the preloading time-value.
- When a high precision bearing assembly is being used, since this requires the use of accessories which will maintain the precision level of the equipment as a whole.
- When the setting of the position of the bearings package must be reliable and long-lasting, even when it is not preloaded (especially if the presence of significant axial efforts is foreseen during the operation of the equipment).

Overall, this type of nuts are used with ball bearings of angular contact (wether high precision or not), with cone bearings or with combined needle bearings.

Due to the high operating precision of these accessories due to an operation carried out on the equipment, at least whenever the nut has to be dismantled.

The self-locking precision nuts assure their position by means of two or four locking elements. These elements are grafts of softer material than steel, that are mechanized during the same operation as that of the interior thread of the nut and are then fitted into the thread of the axle. Nevertheless, this does not modify the perpendicularity of the lateral face of the nut in relation to the axle of the nut. The grafts are fixed to head screws with an inside hexagon, centered on these elements.

Series

Series with blind holes

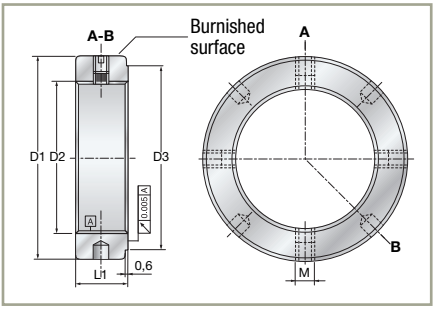

Castellated series

The SNR range of precision self-locking nuts offers a complementary series whose difference lies in the tightening system. Tightening/locking is obtained by castellated design, instead of blind holes. The part numbers for these products are shown in the tables below.

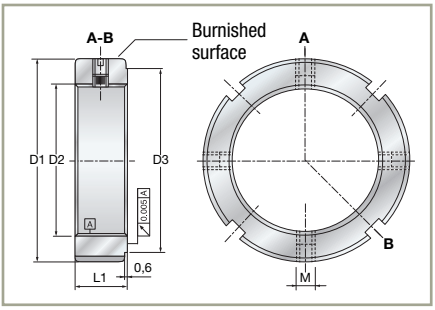

Variants

Castellated series	Series with blind holes	Section	Number of inserts	Thread diameter	Material	Strength	Application
B	TB	Narrow	2	20 to 100 mm	High strength burnished steel	1 000 N/mm²	Normal use
BR	TBR		4				Mean loads, maximum flatness requirement
BP	TBP	Wide	2				High loads
BPR	TBPR		4				Very high loads, maximum flatness requirement

Tolerances

The thread and the flat side of the nut which leans against the bearing are machined in the same fixation, which enables it to reach a high perpendicularity precision of: 0,005 millimeter tolerance.

The thread is in accordance with the rules ISO R/724 with a 5H tolerance and in accordance with ISO 965/1.

Design criteria

The unlocking momentum Md, which is shown on the dimension tables for each type and size of nut is the power needed to apply to loosen this self-locking nut when it has been assembled previously by means of a tightening momentum Ma, and fixed via the tightening of the locking elements against the axle with a maximum tightening power of these elements Mbl, as shown in the tables.

The breaking axial load Far, also shown in the dimension tables, is the axial load which if applied to the nut will produce the breakage of the thread when it is assembled on an axle with a nut tolerance of 60. While operating, the maximum axial load which a nut can bear must be 75% of the breaking axial load Far, defined for such a nut.

Installation/assembly criteria

Since we are dealing with a high precision element, the nuts must be unwrapped until they are going to be used in order to avoid possible mechanical damage or dirt in the thread or on the push side.

They must lean on the covered side of the polished surface.

Once the thread is tightened with a spenner wrench (DIN 1810A and DIN 1810B), the fixation screws of the locking elements are tightened by use of an Allen wrench (for series containing four grafts, tightening these progressively crosswise).

SNR features a wide range of wrenches especially designed for your requirements.

Self-locking precision nuts *(continued)*

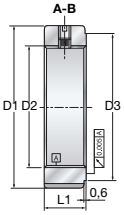

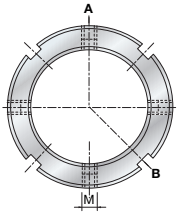

■ Castellated, narrow series

D2		L1	D1	D3	M	Mbl	Far	Ma	Md	
Thread	Reference	mm	mm	mm	mm	N.m	kN	N.m	N.m	kg
M8x0.75	B 8/0.75	8	16	11	M4	1	27	4	26	0.01
M12x1	B 12/1	8	22	18	M4	1	47	8	31	0.015
M15x1	B 15/1	8	25	21	M4	1	65	10	32	0.02
M17x1	B 17/1	10	28	24	M5	3	100	15	32	0.03
M20x1	B 20/1	10	32	28	M5	5	140	18	39	0.04
M20x1.5	B 20/1.5	10	32	28	M5	5	126	18	39	0.04
M 25x1.5	B 25	12	38	33	M5	5	198	25	56	0.06
M 30x1.5	B 30	12	45	40	M5	5	240	32	63	0.08
M 35x1.5	B 35	12	52	47	M5	5	263	40	72	0.11
M 40x1.5	B 40	14	58	52	M6	10	290	55	97	0.15
M 45x1.5	B 45	14	65	59	M6	10	322	65	115	0.18
M 50x1.5	B 50	14	70	64	M6	10	351	85	132	0.20
M 55x2	B 55	16	75	68	M8	18	378	95	148	0.25
M 60x2	B 60	16	80	73	M8	18	405	100	186	0.27
M 65x2	B 65	16	85	78	M8	18	431	120	196	0.28
M 70x2	B 70	18	92	85	M8	18	468	130	228	0.38
M 75x2	B 75	18	98	90	M8	18	497	150	255	0.42
M 80x2	B 80	18	105	95	M8	18	527	160	291	0.49
M 85x2	B 85	18	110	100	M8	18	558	190	315	0.52
M 90x2	B 90	20	120	110	M8	18	603	200	369	0.75
M 95x2	B 95	20	125	115	M8	18	637	220	391	0.78
M 100x2	B 100	20	130	120	M8	18	688	250	432	0.82
M 25x1.5	BR 25	12	38	33	M5	4	198	25	85	0.06
M 30x1.5	BR 30	12	45	40	M5	4	240	32	96	0.08
M 35x1.5	BR 35	12	52	47	M5	4	263	40	107	0.11
M 40x1.5	BR 40	14	58	52	M6	8	290	55	127	0.15
M 45x1.5	BR 45	14	65	59	M6	8	322	65	149	0.18
M 50x1.5	BR 50	14	70	64	M6	8	351	85	180	0.20
M 55x2	BR 55	16	75	68	M8	14	378	95	206	0.25
M 60x2	BR 60	16	80	73	M8	14	405	100	255	0.27
M 65x2	BR 65	16	85	78	M8	14	431	120	277	0.28
M 70x2	BR 70	18	92	85	M8	14	468	130	304	0.38
M 75x2	BR 75	18	98	90	M8	14	497	150	357	0.42
M 80x2	BR 80	18	105	95	M8	14	527	160	396	0.49
M 85x2	BR 85	18	110	100	M8	14	558	190	444	0.52
M 90x2	BR 90	20	120	110	M8	14	603	200	501	0.75
M 95x2	BR 95	20	125	115	M8	14	637	220	550	0.78
M 100x2	BR 100	20	130	120	M8	14	688	250	603	0.82

Far: Ultimate axial load / **Ma**: Tightening torque / **Md**: Brake-away torque corresponding to indicated Ma
Mbl: Max. tightening torque recommended for attachment bolts / **D1**: Outer diameter / **D3**: Bearing face diameter / **L1**: Width

Blind holes, narrow serie

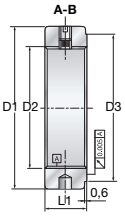

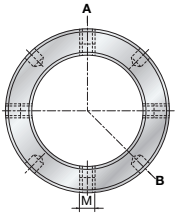

D2		L1	D1	D3	M	Mbl	Far	Ma	Md	
Thread	Reference	mm	mm	mm	mm	N.m	kN	N.m	N.m	kg
M20x1	TB 20/1	10	32	28	M5	5	140	18	39	0.04
M20x1.5	TB 20/1.5	10	32	28	M5	5	126	18	39	0.04
M 25x1.5	TB 25	12	38	33	M5	5	198	25	56	0.06
M 30x1.5	TB 30	12	45	40	M5	5	240	32	63	0.08
M 35x1.5	TB 35	12	52	47	M5	5	263	40	72	0.11
M 40x1.5	TB 40	14	58	52	M6	10	290	55	97	0.15
M 45x1.5	TB 45	14	65	59	M6	10	322	65	115	0.18
M 50x1.5	TB 50	14	70	64	M6	10	351	85	132	0.20
M 55x2	TB 55	16	75	68	M8	18	378	95	148	0.25
M 60x2	TB 60	16	80	73	M8	18	405	100	186	0.27
M 65x2	TB 65	16	85	78	M8	18	431	120	196	0.28
M 70x2	TB 70	18	92	85	M8	18	468	130	228	0.38
M 75x2	TB 75	18	98	90	M8	18	497	150	255	0.42
M 80x2	TB 80	18	105	95	M8	18	527	160	291	0.49
M 85x2	TB 85	18	110	100	M8	18	558	190	315	0.52
M 90x2	TB 90	20	120	110	M8	18	603	200	369	0.75
M 95x2	TB 95	20	125	115	M8	18	637	220	391	0.78
M 100x2	TB 100	20	130	120	M8	18	688	250	432	0.82
M 25x1.5	TBR 25	12	38	33	M5	4	198	25	85	0.06
M 30x1.5	TBR 30	12	45	40	M5	4	240	32	96	0.08
M 35x1.5	TBR 35	12	52	47	M5	4	263	40	107	0.11
M 40x1.5	TBR 40	14	58	52	M6	8	290	55	127	0.15
M 45x1.5	TBR 45	14	65	59	M6	8	322	65	149	0.18
M 50x1.5	TBR 50	14	70	64	M6	8	351	85	180	0.20
M 55x2	TBR 55	16	75	68	M8	14	378	95	206	0.25
M 60x2	TBR 60	16	80	73	M8	14	405	100	255	0.27
M 65x2	TBR 65	16	85	78	M8	14	431	120	277	0.28
M 70x2	TBR 70	18	92	85	M8	14	468	130	304	0.38
M 75x2	TBR 75	18	98	90	M8	14	497	150	357	0.42
M 80x2	TBR 80	18	105	95	M8	14	527	160	396	0.49
M 85x2	TBR 85	18	110	100	M8	14	558	190	444	0.52
M 90x2	TBR 90	20	120	110	M8	14	603	200	501	0.75
M 95x2	TBR 95	20	125	115	M8	14	637	220	550	0.78
M 100x2	TBR 100	20	130	120	M8	14	688	250	603	0.82

Far: Ultimate axial load / **Ma**: Tightening torque / **Md**: Brake-away torque corresponding to indicated Ma
Mbl: Max. tightening torque recommended for attachment bolts / **D1**: Outer diameter / **D3**: Bearing face diameter / **L1**: Width

Self-locking precision nuts *(continued)*

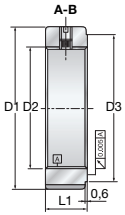

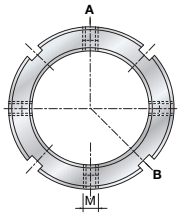

■ Castellated, wide series

D2		L1	D1	D3	M	Mbl	Far	Ma	Md	
Thread	Reference	mm	mm	mm	mm	N.m	kN	N.m	N.m	kg
M20x1	BP20/1	20	38	28	M5	5	255	18	39	0.12
M20x1.5	BP 20/1.5	20	38	28	M5	5	225	18	39	0.12
M25x1.5	BP 25	20	45	33	M6	10	405	25	56	0.17
M 30x1.5	BP 30	22	52	40	M6	10	491	32	63	0.24
M 35x1.5	BP 35	22	58	47	M6	10	560	40	72	0.28
M 40x1.5	BP 40	22	62	52	M8	18	585	55	97	0.29
M 45x1.5	BP 45	24	68	59	M8	18	641	65	115	0.37
M 50x1.5	BP 50	25	75	64	M8	18	706	85	132	0.46
M 55x2	BP 55	32	88	68	M8	18	940	95	148	0.92
M 60x2	BP 60	32	98	73	M8	18	1 070	100	186	1.14
M 65x2	BP 65	32	105	78	M8	18	1 155	120	196	1.29
M 70x2	BP 70	35	110	85	M8	18	1 230	130	228	1.49
M 75x2	BP 75	38	125	90	M10	32	1 300	150	255	2.25
M 80x2	BP 80	38	140	95	M10	32	1 420	160	291	2.97
M 85x2	BP 85	38	150	100	M10	32	1 510	190	315	3.44
M 90x2	BP 90	38	155	110	M10	32	1 596	200	369	3.59
M 95x2	BP 95	38	160	115	M10	32	1 656	220	391	3.73
M 100x2	BP 100	40	160	120	M10	32	1 780	250	432	3.70
M20x1	BPR 20/1	20	38	28	M5	4	255	18	56	0.12
M20x1.5	BPR 20/1.5	20	38	28	M5	4	225	18	56	0.12
M 25x1.5	BPR 25	20	45	33	M6	8	405	25	85	0.17
M 30x1.5	BPR 30	22	52	40	M6	8	491	32	96	0.24
M 35x1.5	BPR 35	22	58	47	M6	8	560	40	107	0.28
M 40x1.5	BPR 40	22	62	52	M8	14	585	55	127	0.29
M 45x1.5	BPR 45	24	68	59	M8	14	641	65	149	0.37
M 50x1.5	BPR 50	25	75	64	M8	14	706	85	180	0.46
M 55x2	BPR 55	32	88	68	M8	14	940	95	206	0.92
M 60x2	BPR 60	32	98	73	M8	14	1 070	100	255	1.14
M 65x2	BPR 65	32	105	78	M8	14	1 155	120	277	1.29
M 70x2	BPR 70	35	110	85	M8	14	1 230	130	304	1.49
M 75x2	BPR 75	38	125	90	M10	26	1 300	150	357	2.25
M 80x2	BPR 80	38	140	95	M10	26	1 420	160	396	2.97
M 85x2	BPR 85	38	150	100	M10	26	1 510	190	444	3.44
M 90x2	BPR 90	38	155	110	M10	26	1 596	200	501	3.59
M 95x2	BPR 95	38	160	115	M10	26	1 656	220	550	3.73
M 100x2	BPR 100	40	160	120	M10	26	1 780	250	603	3.70

Far: Ultimate axial load / **Ma**: Tightening torque / **Md**: Brake-away torque corresponding to indicated Ma
Mbl: Max. tightening torque recommended for attachment bolts / **D1**: Outer diameter / **D3**: Bearing face diameter / **L1**: Width

Blind holes, wide series

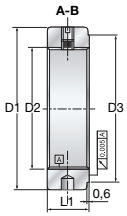

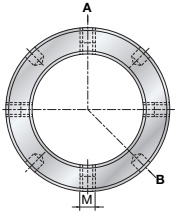

D2		L1	D1	D3	M	Mbl	Far	Ma	Md	
Thread	Reference	mm	mm	mm	mm	N.m	kN	N.m	N.m	kg
M20x1	TBP 20/1	20	38	28	M5	5	255	18	39	0.12
M20x1.5	TBP 20/1.5	20	38	28	M5	5	225	18	39	0.12
M 25x1.5	TBP 25	20	45	33	M6	10	405	25	56	0.17
M 30x1.5	TBP 30	22	52	40	M6	10	491	32	63	0.24
M 35x1.5	TBP 35	22	58	47	M6	10	560	40	72	0.28
M 40x1.5	TBP 40	22	62	52	M8	18	585	55	97	0.29
M 45x1.5	TBP 45	24	68	59	M8	18	641	65	115	0.37
M 50x1.5	TBP 50	25	75	64	M8	18	706	85	132	0.46
M 55x2	TBP 55	32	88	68	M8	18	940	95	148	0.92
M 60x2	TBP 60	32	98	73	M8	18	1 070	100	186	1.14
M 65x2	TBP 65	32	105	78	M8	18	1 155	120	196	1.29
M 70x2	TBP 70	35	110	85	M8	18	1 230	130	228	1.49
M 75x2	TBP 75	38	125	90	M10	32	1 300	150	255	2.25
M 80x2	TBP 80	38	140	95	M10	32	1 420	160	291	2.97
M 85x2	TBP 85	38	150	100	M10	32	1 510	190	315	3.44
M 90x2	TBP 90	38	155	110	M10	32	1 596	200	369	3.59
M 95x2	TBP 95	38	160	115	M10	32	1 656	220	391	3.73
M 100x2	TBP 100	40	160	120	M10	32	1 780	250	432	3.70
M20x1	TBPR 20/1	20	38	28	M5	4	255	18	56	0.12
M20x1.5	TBPR 20/1.5	20	38	28	M5	4	225	18	56	0.12
M 25x1.5	TBPR 25	20	45	33	M6	8	405	25	85	0.17
M 30x1.5	TBPR 30	22	52	40	M6	8	491	32	96	0.24
M 35x1.5	TBPR 35	22	58	47	M6	8	560	40	107	0.28
M 40x1.5	TBPR 40	22	62	52	M8	14	585	55	127	0.29
M 45x1.5	TBPR 45	24	68	59	M8	14	641	65	149	0.37
M 50x1.5	TBPR 50	25	75	64	M8	14	706	85	180	0.46
M 55x2	TBPR 55	32	88	68	M8	14	940	95	206	0.92
M 60x2	TBPR 60	32	98	73	M8	14	1 070	100	255	1.14
M 65x2	TBPR 65	32	105	78	M8	14	1 155	120	277	1.29
M 70x2	TBPR 70	35	110	85	M8	14	1 230	130	304	1.49
M 75x2	TBPR 75	38	125	90	M10	26	1 300	150	357	2.25
M 80x2	TBPR 80	38	140	95	M10	26	1 420	160	396	2.97
M 85x2	TBPR 85	38	150	100	M10	26	1 510	190	444	3.44
M 90x2	TBPR 90	38	155	110	M10	26	1 596	200	501	3.59
M 95x2	TBPR 95	38	160	115	M10	26	1 656	220	550	3.73
M 100x2	TBPR 100	40	160	120	M10	26	1 780	250	603	3.70

Far: Ultimate axial load / **Ma**: Tightening torque / **Md**: Brake-away torque corresponding to indicated Ma
Mbl: Max. tightening torque recommended for attachment bolts / **D1**: Outer diameter / **D3**: Bearing face diameter / **L1**: Width

Snap ring

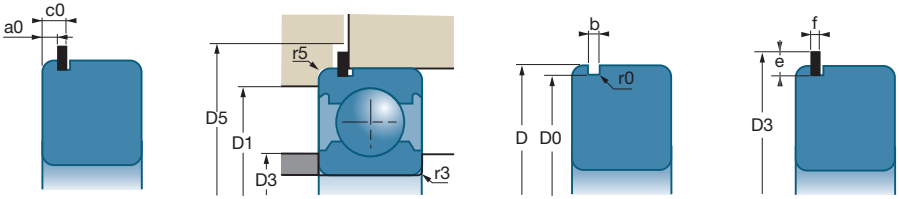

D	Ref.	Reference	a0		c0		D5	r5	d0	
			min	max	min	max	min	max	min	max
mm	mm		mm	mm	mm	mm	mm	mm	mm	mm
30	R30	6200	1.90	2.06	2.92	3.18	36.0	0.6	27.91	28.17
32	R32	6002	1.90	2.06	2.92	3.18	38.0	0.3	29.90	30.15
		6201	1.90	2.06	2.92	3.18	38.0	0.6	29.90	30.15
35	R35	6003	1.90	2.06	2.92	3.18	41.0	0.3	32.92	33.17
		6202-5202 6300	1.90	2.06	2.92	3.18	41.0	0.6	32.92	33.17
37	R37	6301	1.90	2.06	2.92	3.18	42.5	0.6	34.52	34.77
40	R40	6203-5203	1.90	2.06	2.92	3.18	46.5	0.6	37.85	38.10
42	R42	6004 6302	1.90	2.06	2.92	3.18	47.5	0.6	39.50	39.75
47	R47	6005	1.90	2.06	2.92	3.18	54.0	0.6	44.35	44.60
		6204-5204 6303-5303	2.31	2.46	3.33	3.58	54.0	0.6	44.35	44.60
50	R50	620/22	2.31	2.46	3.33	3.58	57.0	0.6	47.35	47.60
52	R52	6205-5205 6304-5304	2.31	2.46	3.33	3.58	59.0	0.6	49.48	49.73
55	R55	6006	1.88	2.08	2.90	3.20	62.0	0.6	52.35	52.60
62	R62	6007	1.88	2.08	3.48	3.78	69.0	0.6	59.11	59.61
		6206-5206 6305-5305 6403	3.07	3.28	4.67	4.98	69.0	0.6	59.11	59.61
68	R68	6008	2.29	2.49	3.89	4.19	76.0	0.6	64.31	64.82
72	R72	6207-5207 6306-5306 6404	3.07	3.28	4.67	4.98	80.0	0.6	68.30	68.81
75	R75	6009	2.29	2.49	3.89	4.19	83.0	0.6	71.32	71.83
80	R80	6010	2.29	2.49	3.89	4.19	88.0	0.6	76.30	76.81
		6208-5208 6307-5307 6405	3.07	3.28	4.67	4.98	88.0	0.6	76.30	76.81
85	R85	6209-5209	3.07	3.28	4.67	4.98	93.0	0.6	81.31	81.81
90	R90	6011	2.67	2.87	5.03	5.33	97.5	0.6	86.28	86.79
		6210-5210 6308-5308 6406	3.07	3.28	5.43	5.74	97.5	0.6	86.28	86.79

Snap ring

D	Ref.		b		r0	D3	e		f	
			min	max	min	max	min	max	min	max
mm	mm	Reference	mm	mm	mm	mm	mm	mm	mm	mm
30	R30	6200	1.35	1.65	0.4	34.7	3.1	3.25	1.02	1.12
32	R32	6002	1.35	1.65	0.4	36.7	3.1	3.25	1.02	1.12
		6201	1.35	1.65	0.4	36.7	3.1	3.25	1.02	1.12
35	R35	6003	1.35	1.65	0.4	39.7	3.1	3.25	1.02	1.12
		6202-5202 6300	1.35	1.65	0.4	39.7	3.1	3.25	1.02	1.12
37	R37	6301	1.35	1.65	0.4	41.3	3.1	3.25	1.02	1.12
40	R40	6203-5203	1.35	1.65	0.4	44.6	3.1	3.25	1.02	1.12
42	R42	6004 6302	1.35	1.65	0.4	46.3	3.1	3.25	1.02	1.12
47	R47	6005	1.35	1.65	0.4	52.7	3.89	4.04	1.02	1.12
		6204-5204 6303-5303	1.35	1.65	0.4	52.7	3.89	4.04	1.02	1.12
50	R50	620/22	1.35	1.65	0.4	55.7	3.89	4.04	1.02	1.12
52	R52	6205-5205 6304-5304	1.35	1.65	0.4	57.9	3.89	4.04	1.02	1.12
55	R55	6006	1.35	1.65	0.4	60.7	3.89	4.04	1.02	1.12
62	R62	6007	1.90	2.20	0.6	67.7	3.89	4.04	1.6	1.70
		6206-5206 6305-5305 6403	1.90	2.20	0.6	67.7	3.89	4.04	1.6	1.70
68	R68	6008	1.90	2.20	0.6	74.6	4.7	4.85	1.6	1.70
72	R72	6207-5207 6306-5306 6404	1.90	2.20	0.6	78.6	4.7	4.85	1.6	1.70
75	R75	6009	1.90	2.20	0.6	81.6	4.7	4.85	1.6	1.70
80	R80	6010	1.90	2.20	0.6	86.6	4.7	4.85	1.6	1.70
		6208-5208 6307-5307 6405	1.90	2.20	0.6	86.6	4.7	4.85	1.6	1.70
85	R85	6209-5209	1.90	2.20	0.6	91.6	4.7	4.85	1.6	1.70
90	R90	6011	2.70	3.00	0.6	96.5	4.7	4.85	2.36	2.46
		6210-5210 6308-5308 6406	2.70	3.00	0.6	96.5	4.7	4.85	2.36	2.46

Snap ring *(continued)*

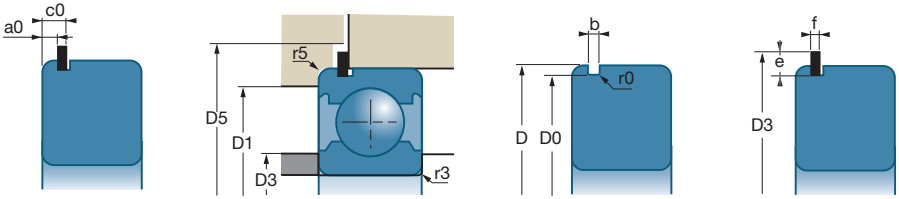

D	Ref.		a0		c0		D5	r5	d0	
			min	max	min	max	min	max	min	max
mm	mm	Reference	mm	mm	mm	mm	mm	mm	mm	mm
95	R95	6012	2.67	2.87	5.03	5.33	103.0	0.6	91.31	91.82
100	R100	6013	2.67	2.87	5.03	5.33	107.5	0.6	96.29	96.80
		6211-5211 6309-5309 6407	3.07	3.28	5.43	5.74	107.5	0.6	96.29	96.80
110	R110	6014	2.67	2.87	5.03	5.33	117.5	0.6	106.30	106.81
		6212-5212 6310-5310 6408	3.07	3.28	5.43	5.74	118.0	0.6	106.30	106.81
115	R115	6015	2.67	2.87	5.03	5.33	123.0	0.6	111.30	111.81
120	R120	6213-5213 6311-5311 6409	3.86	4.06	6.58	6.88	131.0	0.6	114.71	115.21
125	R125	6016	2.67	2.87	5.39	5.69	136.0	0.6	119.71	120.22
		6214-5214	3.86	4.06	6.58	6.88	136.0	0.6	119.71	120.22
130	R130	6017	2.67	2.87	5.39	5.69	141.0	0.6	124.71	125.22
		6215 6312-5312 6410	3.86	4.06	5.58	6.88	141.0	0.6	124.71	125.22
140	R140	6018	3.45	3.71	6.17	6.53	151.0	0.6	134.72	135.23
		6216 6313-5313 6411	4.65	4.90	7.37	7.72	151.0	0.6	134.72	135.23
145	R145	6019	3.45	3.71	6.17	6.53	156.0	0.6	139.73	140.23
150	R150	6020	3.45	3.71	6.17	6.53	161.0	0.6	144.73	145.24
		6217 6314 6412	4.65	4.90	7.37	7.72	161.0	0.6	144.73	145.24
160	R160	6021	3.45	3.71	6.17	6.53	171.0	0.6	154.71	155.22
		6218 6315 6413	4.65	4.90	7.37	7.72	171.0	0.6	154.71	155.22
170	R170	6022	3.45	3.71	6.45	6.81	184.0	0.6	163.14	163.65
		6219 6316	5.44	5.69	8.44	8.79	184.0	0.6	163.14	163.65
180	R180	6024	3.45	3.71	6.45	6.81	194.0	0.6	173.15	173.66
		6220 6317 6414	5.44	5.69	8.44	8.79	194.0	0.6	173.15	173.66
190	R190	6221 6318 6415	5.44	5.69	8.44	8.79	204.0	0.6	183.13	183.64
200	R200	6026 6222 6319 6416	5.44	5.69	8.44	8.79	214.0	0.6	193.14	193.65

Snap ring *(continued)*

D	Ref.		b		r0	D3	e		f	
			min	max	min	max	min	max	min	max
mm	mm	Reference	mm	mm	mm	mm	mm	mm	mm	mm
95	R95	6012	2.70	3.00	0.6	101.6	4.7	4.85	2.36	2.46
100	R100	6013	2.70	3.00	0.6	106.5	4.7	4.85	2.36	2.46
		6211-5211 6309-5309 6407	2.70	3.00	0.6	106.5	4.7	4.85	2.36	2.46
110	R110	6014	2.70	3.00	0.6	116.6	4.7	4.85	2.36	2.46
		6212-5212 6310-5310 6408	2.70	3.00	0.6	116.6	4.7	4.85	2.36	2.46
115	R115	6015	2.70	3.00	0.6	121.6	4.7	4.85	2.36	2.46
120	R120	6213-5213 6311-5311 6409	3.10	3.40	0.6	129.7	7.06	7.21	2.72	2.82
125	R125	6016	3.10	3.40	0.6	134.7	7.06	7.21	2.72	2.82
		6214-5214	3.10	3.40	0.6	134.7	7.06	7.21	2.72	2.82
130	R130	6017	3.10	3.40	0.6	139.7	7.06	7.21	2.72	2.82
		6215 6312-5312 6410	3.10	3.40	0.6	139.7	7.06	7.21	2.72	2.82
140	R140	6018	3.10	3.40	0.6	149.7	7.06	7.21	2.72	2.82
		6216 6313-5313 6411	3.10	3.40	0.6	149.7	7.06	7.21	2.72	2.82
145	R145	6019	3.10	3.40	0.6	154.7	7.06	7.21	2.72	2.82
150	R150	6020	3.10	3.40	0.6	159.7	7.06	7.21	2.72	2.82
		6217 6314 6412	3.10	3.40	0.6	159.7	7.06	7.21	2.72	2.82
160	R160	6021	3.10	3.40	0.6	169.7	7.06	7.21	2.72	2.82
		6218 6315 6413	3.10	3.40	0.6	169.7	7.06	7.21	2.72	2.82
170	R170	6022	3.50	3.80	0.6	182.9	9.45	9.6	3.00	3.10
		6219 6316	3.50	3.80	0.6	182.9	9.45	9.6	3.00	3.10
180	R180	6024	3.50	3.80	0.6	192.9	9.45	9.6	3.00	3.10
		6220 6317 6414	3.50	3.80	0.6	192.9	9.45	9.6	3.00	3.10
190	R190	6221 6318 6415	3.50	3.80	0.6	202.9	9.45	9.6	3.00	3.10
200	R200	6026 6222 6319 6416	3.50	3.80	0.6	212.9	9.45	9.6	3.00	3.10